BPK300
Spare parts catalogue

Duun Industrier as
7630 Åsen, Norway
www.duun.no

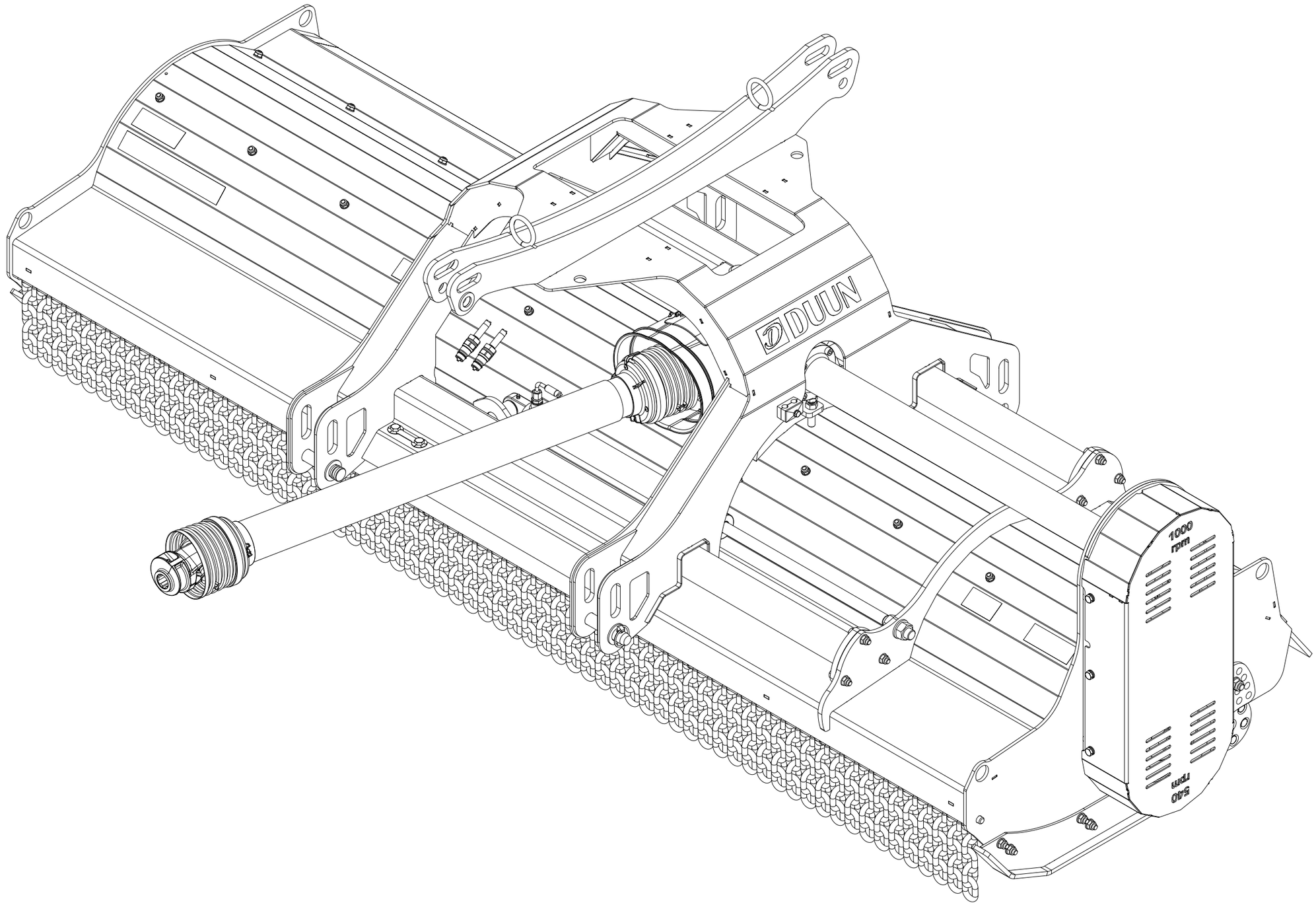

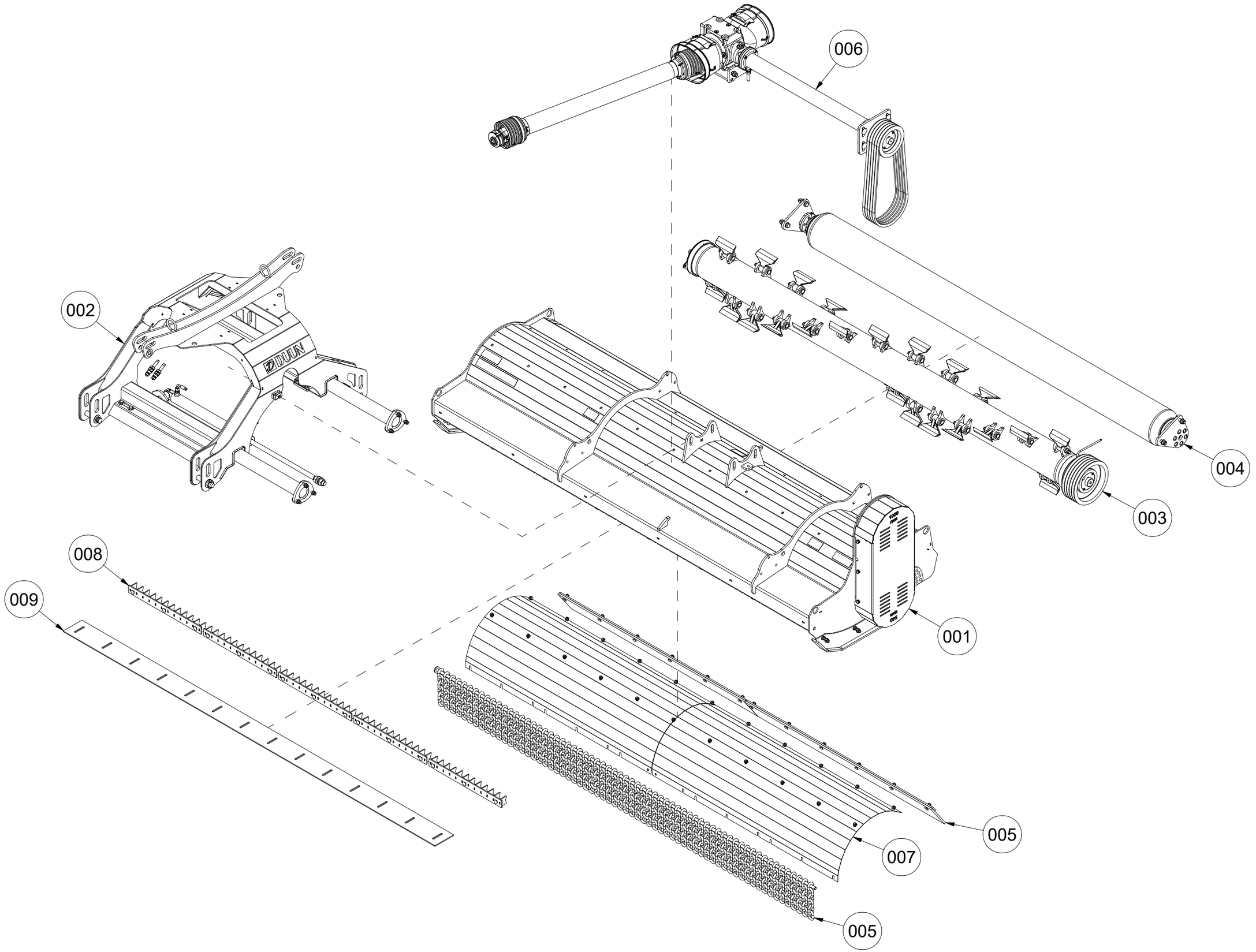
006
002
004
003
008
009
001
005
007
005

001 Hull BPK300

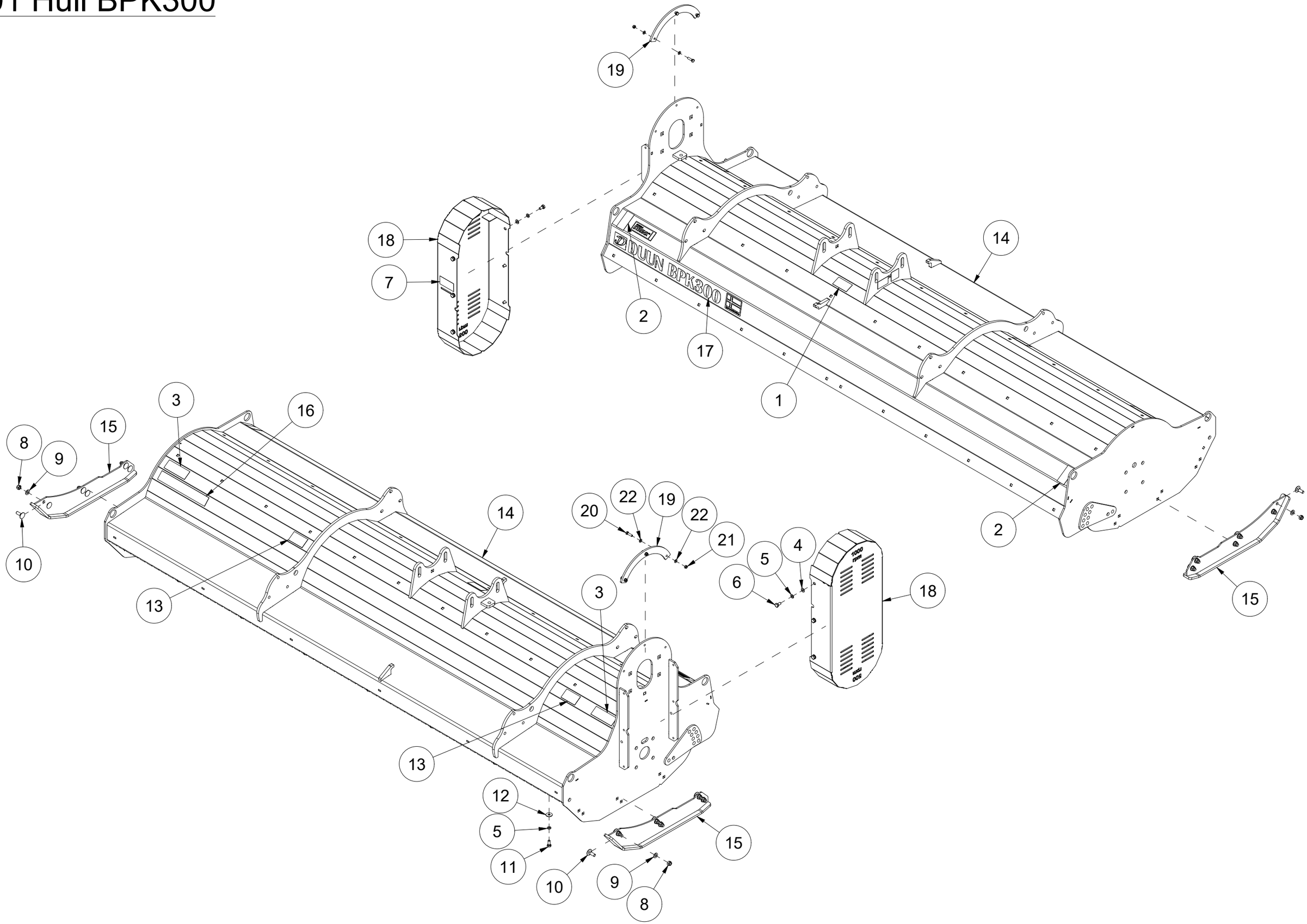

Pos	Qty	Article no	Designation
1	1	2935185	Adhesive label 90x48 Crush hazard
2	2	2935186	Adhesive label 48x90 Keep distance
3	2	2935188	Adhesive label 135x48 Cut hazard
4	6	2531060	Washer M10 ElZn DIN 125
5	20	2534060	Spring washer M10 ElZn DIN 127
6	6	2422295	Hexagon screw M10x20 ElZn 8.8 DIN 933
7	1	2935189	Adhesive label 90x48 Belt tensioning
8	12	2483611	Locking nut M12 ElZn DIN 985
9	12	2531069	Washer M12 ElZn DIN 125
10	12	2344350	Locking screw M12x35 ElZn 8.8 DIN 603
11	14	2422297	Spring washer M10x25 ElZn 8.8 DIN 933
12	14	2533060	Body washer M10 ElZn DIN 9021
13	2	2935088	Adhesive label 90x48 Crushing hand hazard
14	1	27131001	Hull BPK300
15	2	27201025	Skid pad
16	1	2935122	Adhesive label 45x309 Mulcher 1000 rpm collective sign
17	1	2935184	Adhesive label BPK300
18	1	27131014	Cover V2
19	1	27131015	Cover plate
20	3	2422248	Spring washer M8x30 ElZn 8.8 DIN 933
21	3	2483609	Locking nut M8 ElZn DIN 985
22	6	2531047	Washer M8 ElZn DIN 125

002 Tractor attachment BPK300

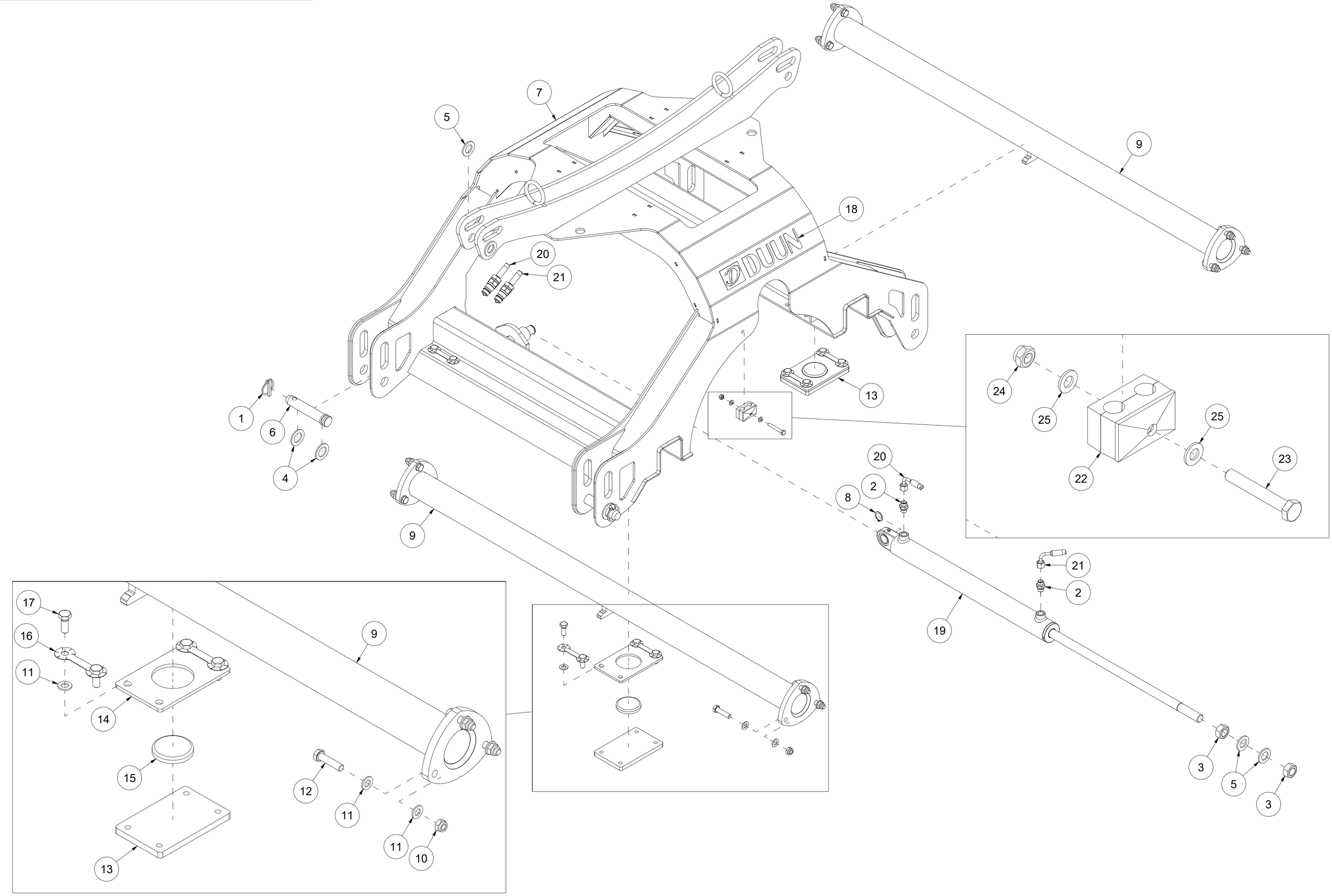

Pos	Qty	Article no	Designation
1	2	2556142	Linch pin Ø10x40
2	2	2957751	Hexagon nipple GEK BSP 3/8" L10 ED Ø3,0
3	2	2482617	Hexagon nut M24x1.5 ElZn DIN 934
4	4	2533097	Washer Ø30/50x3,5
5	4	2533095	Washer Ø26/45x4
6	2	2551731	Drawbar bolt cat. 2 Ø28x110
7	1	27131002	Combi tractor attachment
8	1	2553125	Seeger ring A 25x1,2 DIN 471
9	2	27131003	Sliding tube
10	12	2483611	Locking nut M12 ElZn DIN 985
11	40	2531069	Washer M12 ElZn DIN 125
12	12	2422356	Hexagon screw M12x50 ElZn 8.8 DIN 931
13	4	27131004	Plate
14	4	27131006	Plate
15	4	27131005	Sliding plate
16	8	27131011	Locking plate
17	16	2422348	Hexagon screw M12x30 ElZn 8.8 DIN 933
18	2	2935071	Adhesive label Duun H60
19	1	2955373	Cylinder Ø50x25 SL500
20	1	2958404	Hydraulic hose 1/4" L3100
21	1	2958403	Hydraulic hose 1/4" L2560
22	1	4251206	Hose holder
23	1	2422258	Hexagon screw M8x55 ElZn 8.8 DIN 931
24	1	2483809	Locking nut M8 A4 DIN 985
25	2	2531047	Washer M8 ElZn DIN 125

003 Rotor BPK300

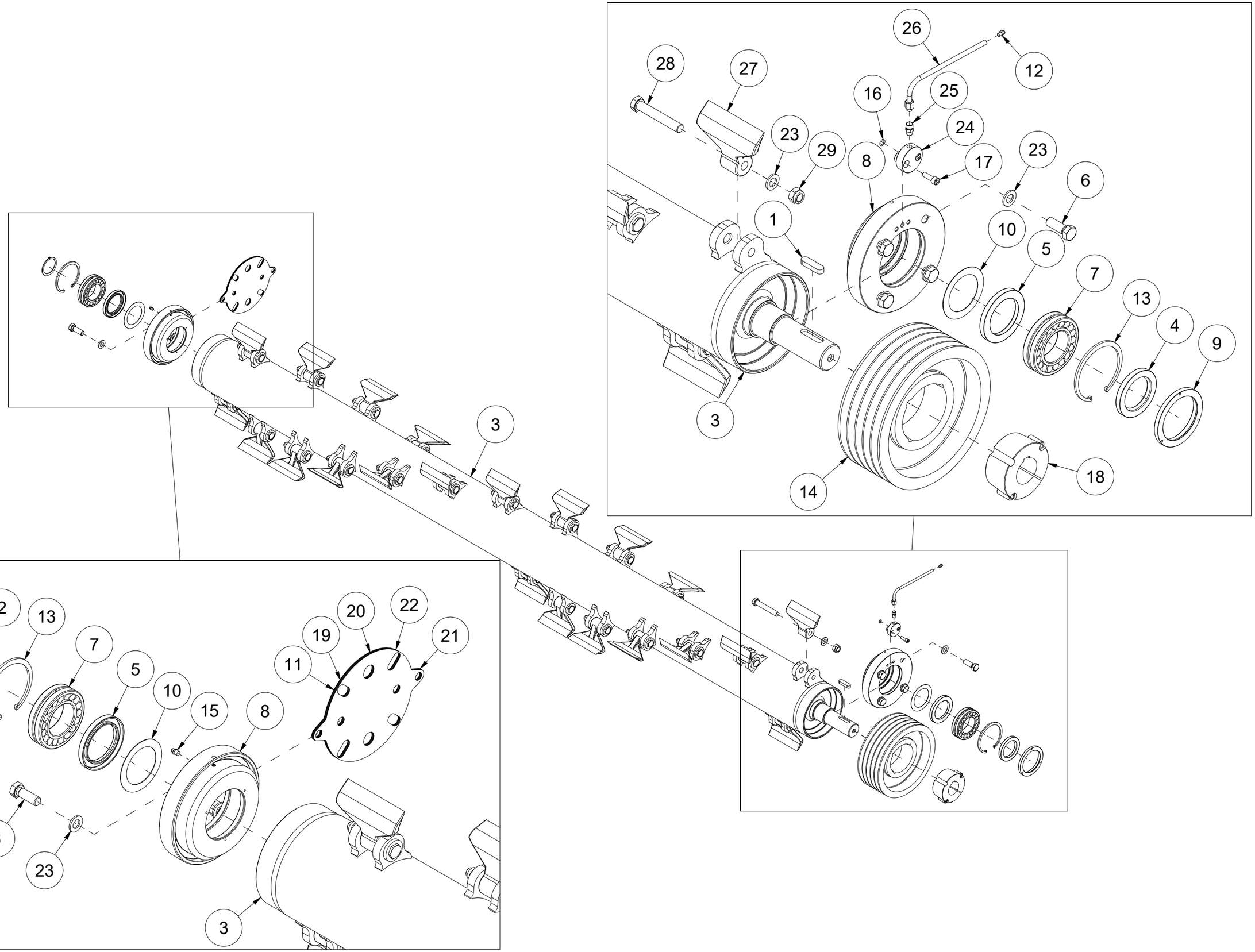

Pos	Qty	Article no	Designation
1	1	2115175	Cotter 14x9 L50 St DIN 6885A
2	1	2553160	Seeger ring A 60x2,0 DIN 471
3	1	27121002	Rotor BP300
4	1	2234157	Simmerring Ø60/90x10
5	2	2234161	Simmerring Ø70/100x10 AS
6	8	2423491	Hexagon screw M16x45 ElZn 10.9 DIN 933
7	2	2953322	Roller bearing 22212.EAW33C3 Ø60/110x28
8	2	27121014	Bearing
9	1	27121015	Ring
10	2	27101043	Washer holder
11	1	27121017	Shims rotor 3 mm
12	1	2478409	Grease nipple, Straight M6
13	2	2553310	Seeger ring I 110x4,0 DIN 472
14	1	2965390	Pulley 265x5 SPB 3020
15	1	2478407	Grease nipple, Straight M8
16	1	2233008	O-ring 8,00x2,00 NBR 70
17	2	2472315	Unbrako cylinder screw M8x25 ElZn DIN 912
18	1	2965321	Bushing Ø50 TL3020
19	1	27121031	Shims rotor 2 mm
20	1	27121034	Shims rotor 1 mm
21	1	27121070	Shims rotor 5 mm
22	1	27121069	Shims rotor 4 mm
23	34	2531078	Washer M16 ElZn DIN 125
24	1	27201089	Lubricating adapter attachment
25	1	2957752	Hexagon nipple BSP 1/8-GE08LLR, Nut, DPR
26	1	27121072	Lubrication tube BPK
27	26	2112210	Hammer knife
28	26	2428502	Hexagon screw M16x1,5x100 ElZn 10.9 DIN 960
29	26	2482613	Locking nut M16x1,5 ElZn DIN 985

004 Roller BPK300

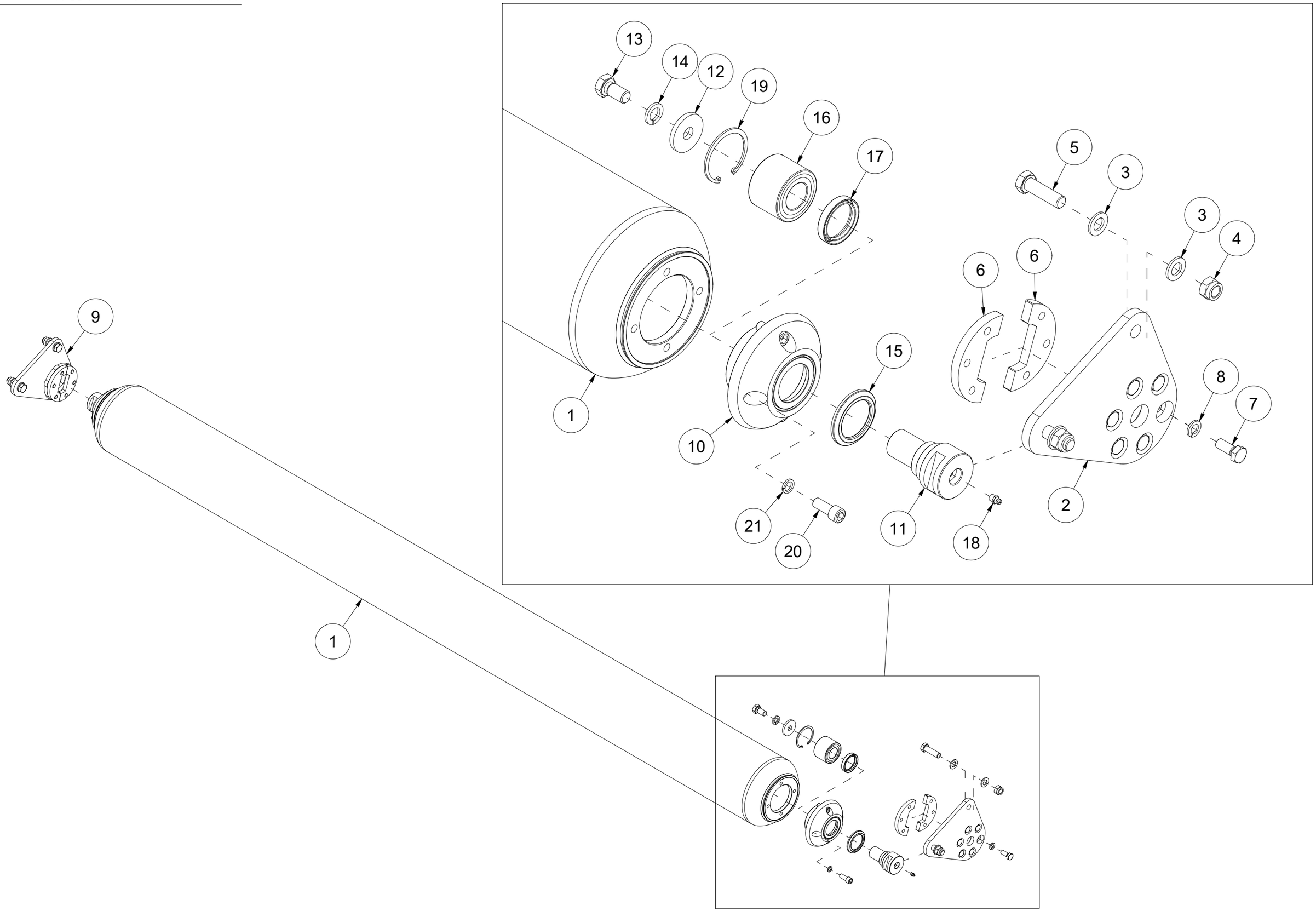

Pos	Qty	Article no	Designation
1	1	27121003	Roller BP300
2	1	27121013	Left side bracket
3	8	2531078	Washer M16 ElZn DIN 125
4	4	2483613	Locking nut M16 ElZn DIN 985
5	4	2422494	Hexagon screw M16x55 ElZn 8.8 DIN 931
6	4	27121054	Fastening bracket
7	12	2422348	Hexagon screw M12x30 ElZn 8.8 DIN 933
8	12	2534069	Spring washer M12 ElZn DIN 127
9	1	27121018	Right side bracket
10	2	27121052	Bearing
11	2	27121053	Shaft
12	2	27121057	Washer Ø16/50x6
13	2	2422485	Hexagon screw M16x30 ElZn 8.8 DIN 933
14	2	2534078	Spring washer M16 ElZn DIN 127
15	2	2232350	Sealing Ø50x72x5,5 9RB
16	2	2953323	Bearing Ø35/68x48
17	2	2234151	Simmerring Ø45/60x10
18	2	2478407	Grease nipple, Straight M8
19	2	2553268	Seeger ring I 68x2,5 DIN 472
20	8	2477348	Unbrako cylinder screw M12x30 ElZn DIN 912
21	8	2534070	Spring washer M12 ElZn DIN 7980

005 Protection chain BPK300

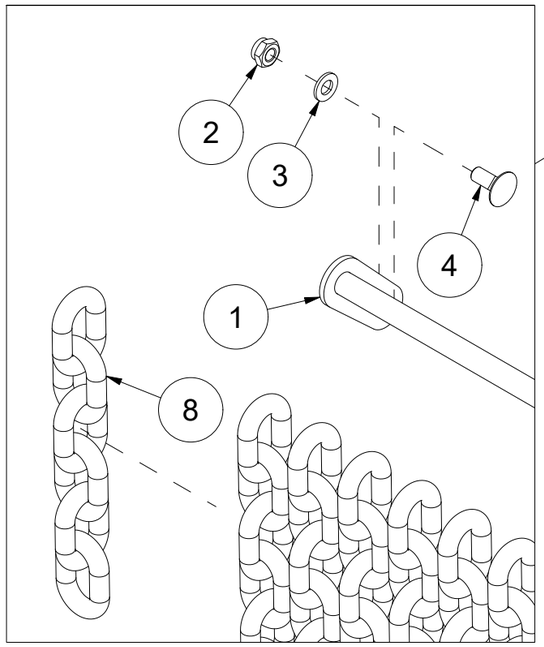

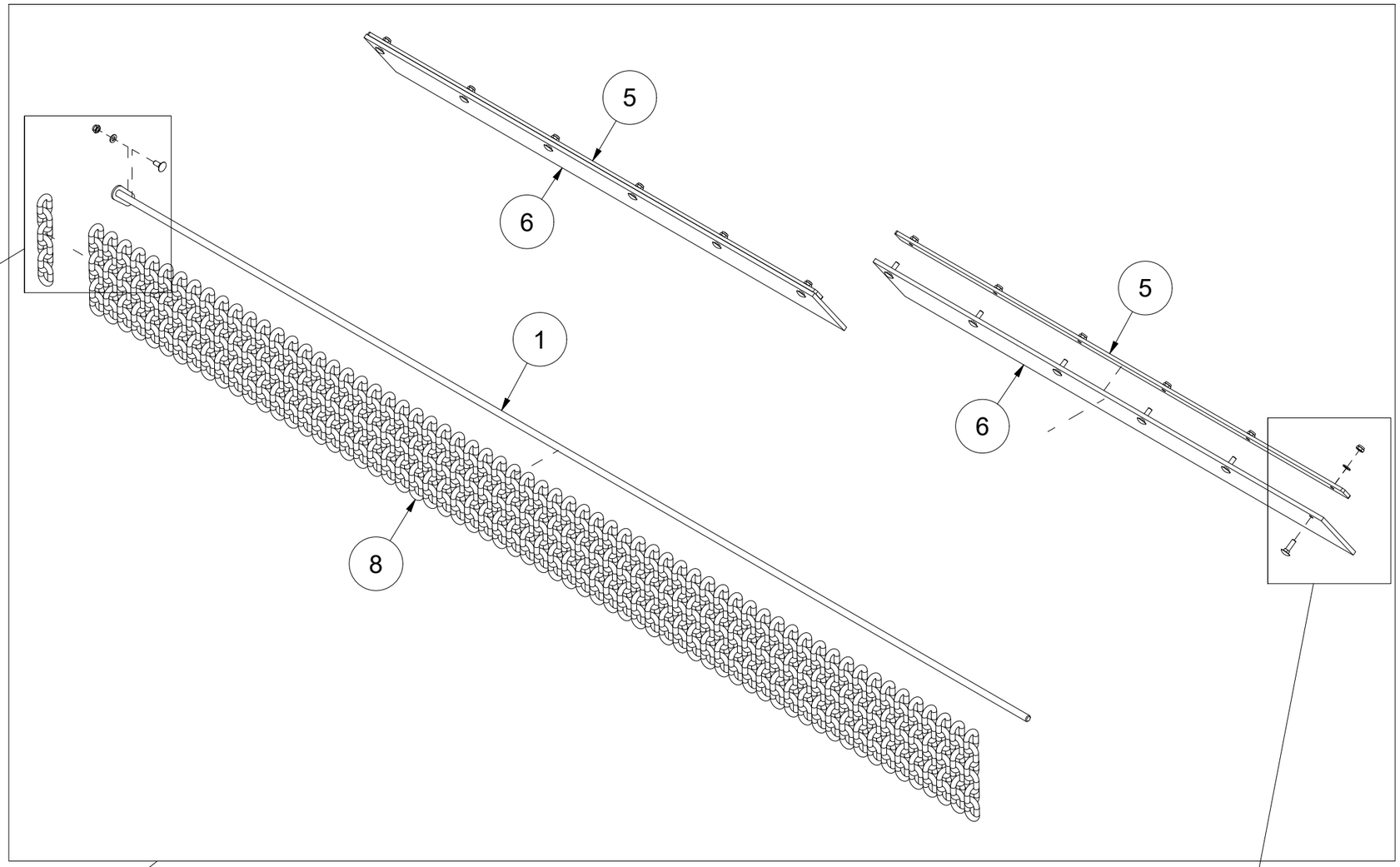

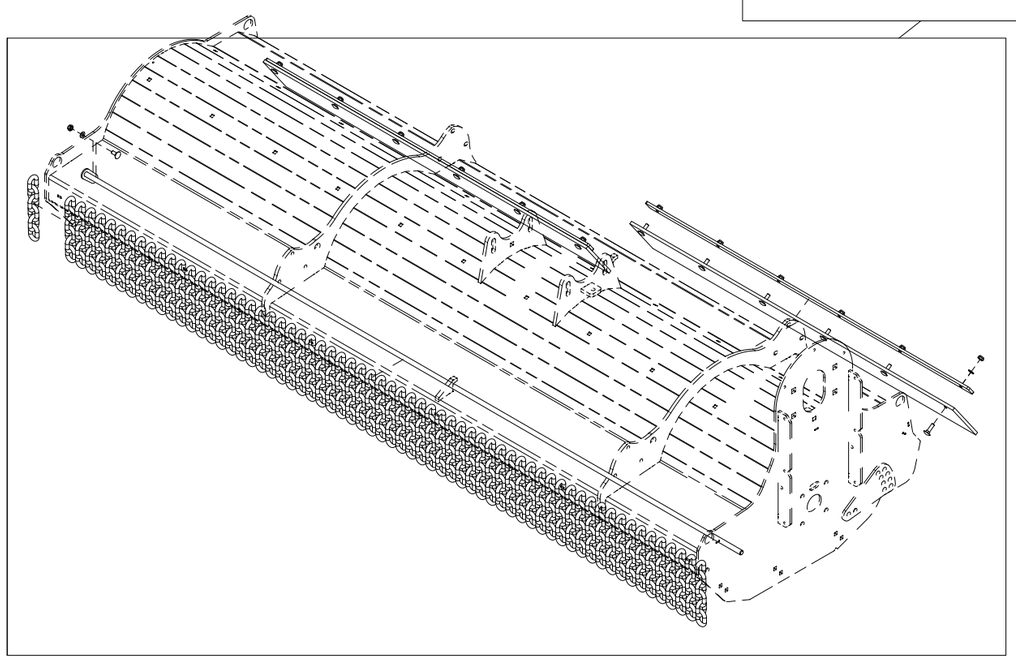

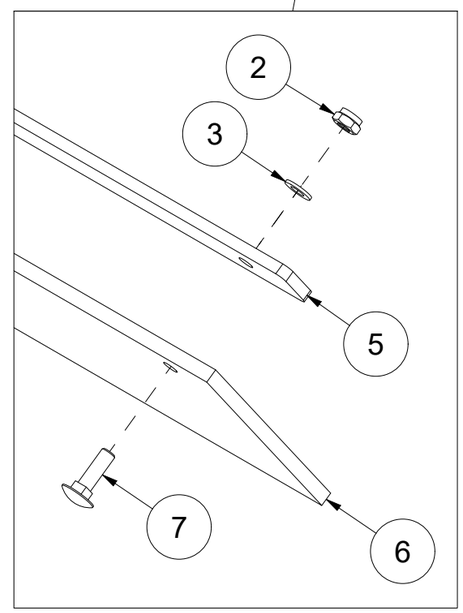

Pos	Qty	Article no	Designation
1	1	27121011	Rod
2	13	2483610	Locking nut M10 ElZn DIN 985
3	13	2531060	Washer M10 ElZn DIN 125
4	1	2344330	Locking screw M10x25 ElZn 8.8 DIN 603
5	2	27121036	Attachment rail
6	2	27121019	Rubber plate
7	12	2344332	Locking screw M10x35 ElZn 8.8 DIN 603
8	65	2555015	6 link chain

006 Gearbox BPK300

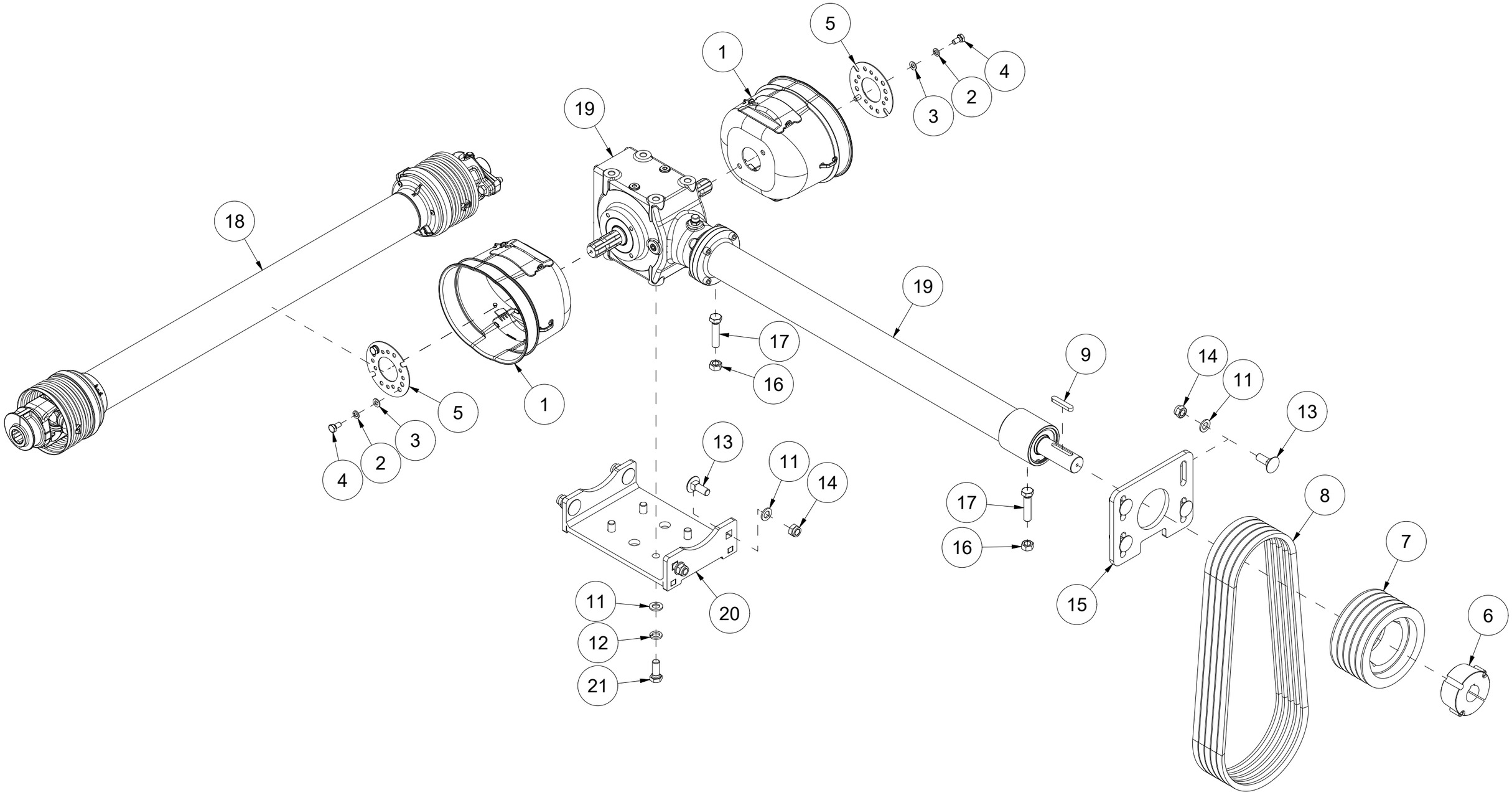

Pos	Qty	Article no	Designation
1	2	27101027	Safety funnel
2	4	2534060	Spring washer M10 ElZn DIN 127
3	4	2531060	Washer M10 ElZn DIN 125
4	4	2422295	Hexagon screw M10x20 ElZn 8.8 DIN 933
5	2	31231079	Fastening plate for safety funnel
6	1	2965320	Bushing Ø40 TL3020
7	1	2965385	Pulley 190x5 SPB 3020
8	5	2965230	V-belts XPB L1600
9	1	2115164	Cotter 12x8 L63 St DIN 6885A
10	1	27121008	Gear oil
11	12	2531078	Washer M16 ElZn DIN 125
12	4	2534078	Spring washer M16 ElZn DIN 127
13	8	2344491	Locking screw M16x45 ElZn 8.8 DIN 603
14	8	2483613	Locking nut M16 ElZn DIN 985
15	1	27121028	Bracket
16	2	2481613	Hexagon nut M16 ElZn DIN 934
17	2	2425498	Hexagon screw M16x70 ElZn 8.8 DIN 933
18	1	2962166	Power transmission shaft 3/8" L1210
19	1	2961137	Gearbox 1:2,58 2x90° with extension L1040
20	1	27131010	Bracket
21	4	2422489	Hexagon screw M16x40 ElZn 8.8 DIN 933

007 Protective cover BPK300

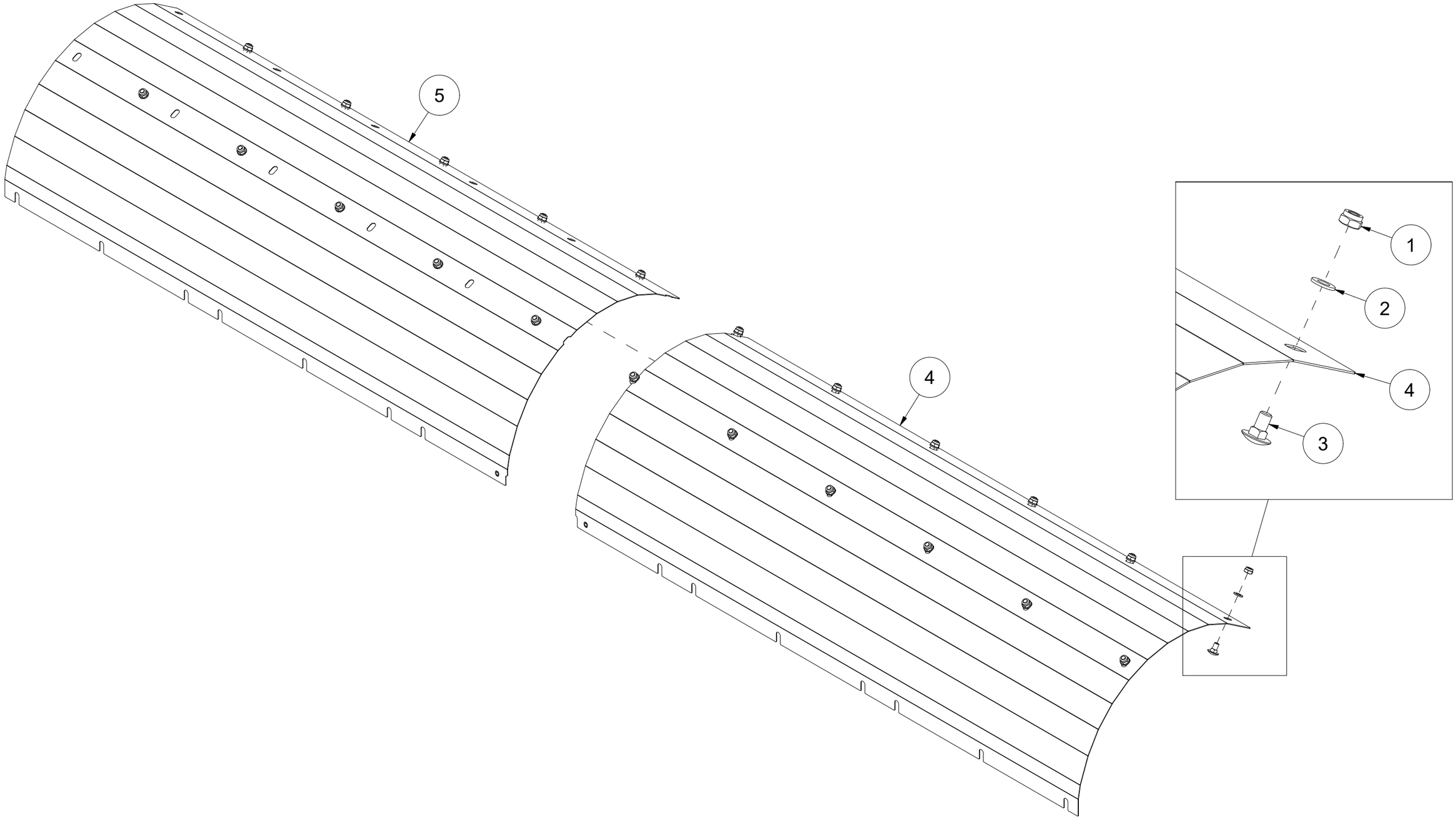

Pos	Qty	Article no	Designation
1	22	2483610	Locking nut M10 ElZn DIN 985
2	22	2531060	Washer M10 ElZn DIN 125
3	22	2344295	Locking screw M10x20 ElZn 8.8 DIN 603
4	1	27131007	Left side wear cover
5	1	27131008	Right side wear cover

008 Counter knives BPK300

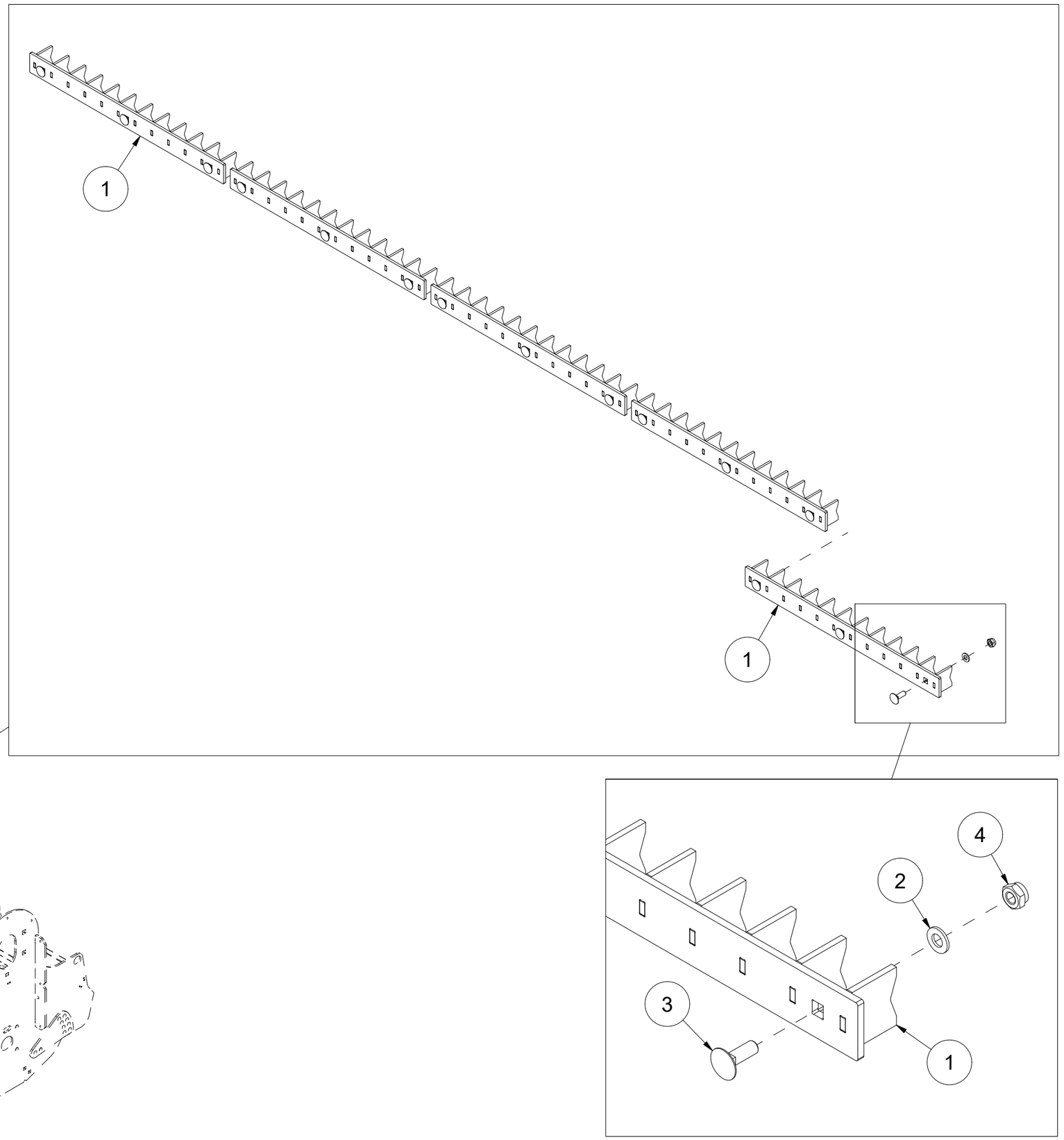

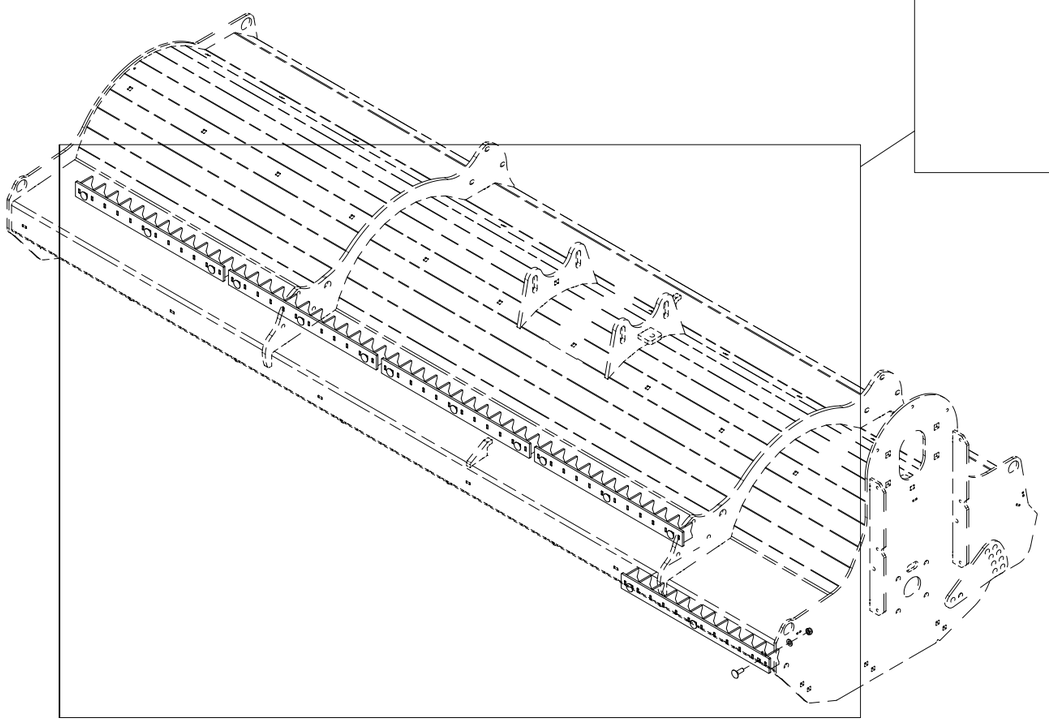

Pos	Qty	Article no	Designation
1	5	27121058	Knife
2	15	2531060	Washer M10 ElZn DIN 125
3	15	2344331	Locking screw M10x30 ElZn 8.8 DIN 603
4	15	2483610	Locking nut M10 ElZn DIN 985

009 Cutting rail BPK300

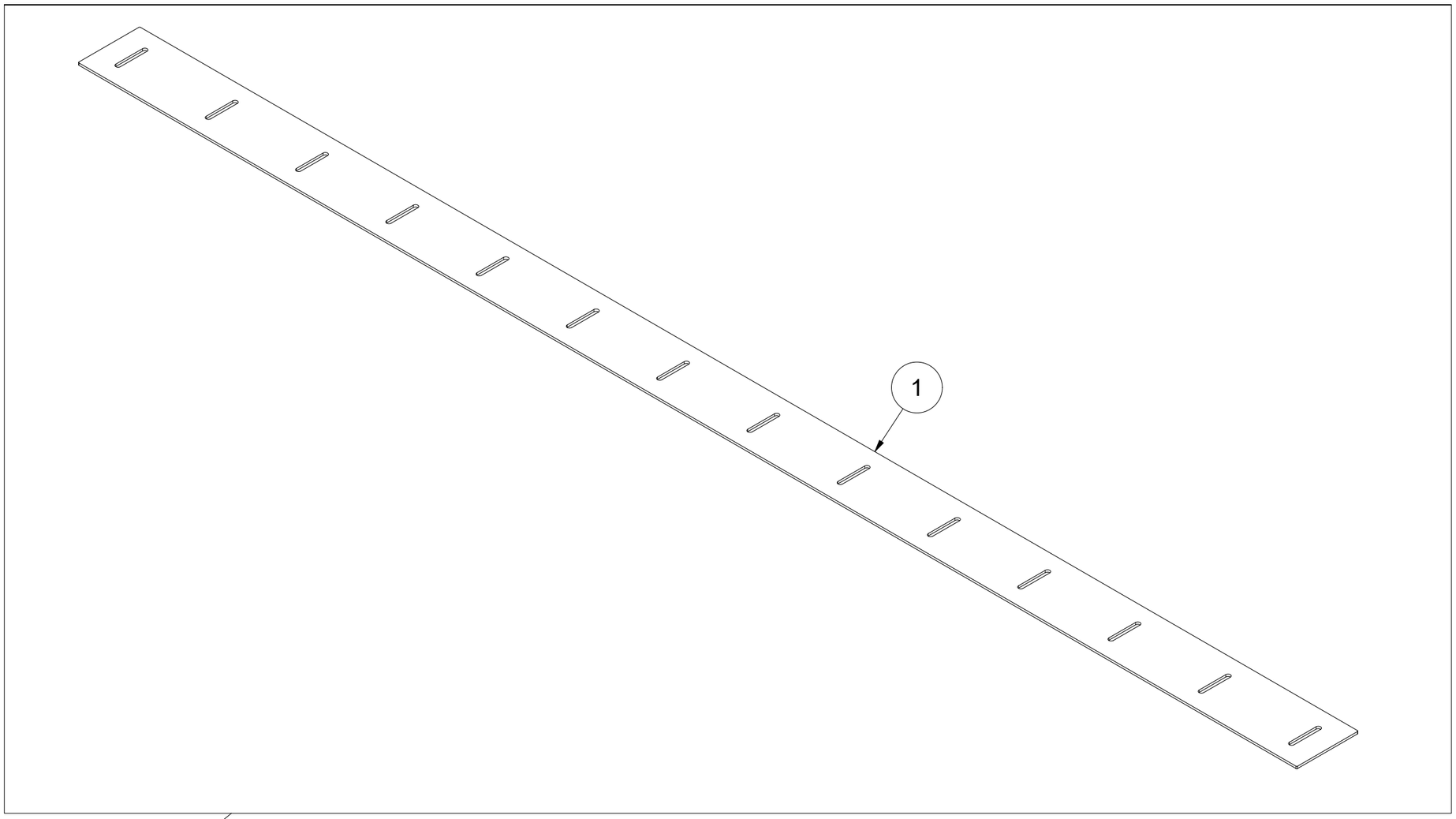

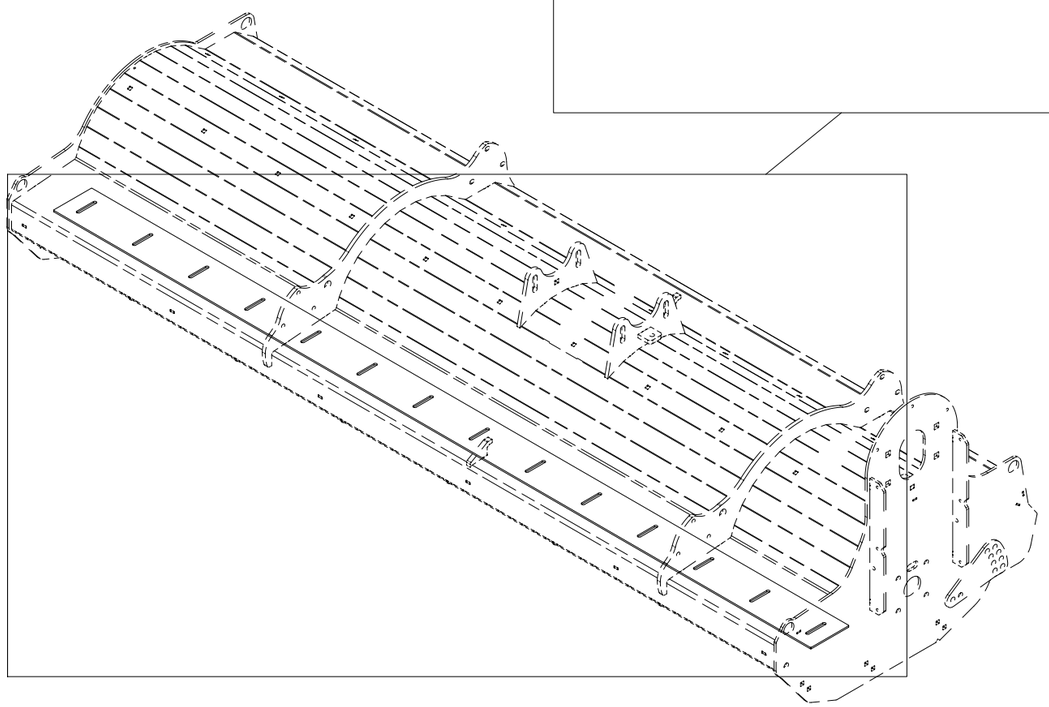

Pos	Qty	Article no	Designation
1	1	27121059	Cutting rail